DO NOT SCALE DRAWING

THE INFORMATION CONTAINED HEREIN IS THE EXCLUSIVE PROPERTY OF VIRGINIA PANEL CORPORATION AND IS SUBMITTEDFOR USE BY THE CUSTOMER ONLY. THE DATA SHALL NOT BE DUPLICATED, USED, OR DISCLOSED IN WHOLE OR IN PART FOR ANY PURPOSE OTHER THAN TO MAINTAIN THE EQUIPMENT PROVIDED. CONSULT WITH VIRGINIA PANEL CORPORATION ENGINEERING IF MORE DETAIL IS REQUIRED.

REVISIONS

REV	DESCRIPTION	DATE	ENGR
C	ECN #5997	5/12/15	R HERRON

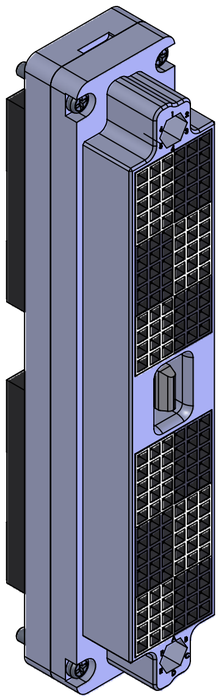

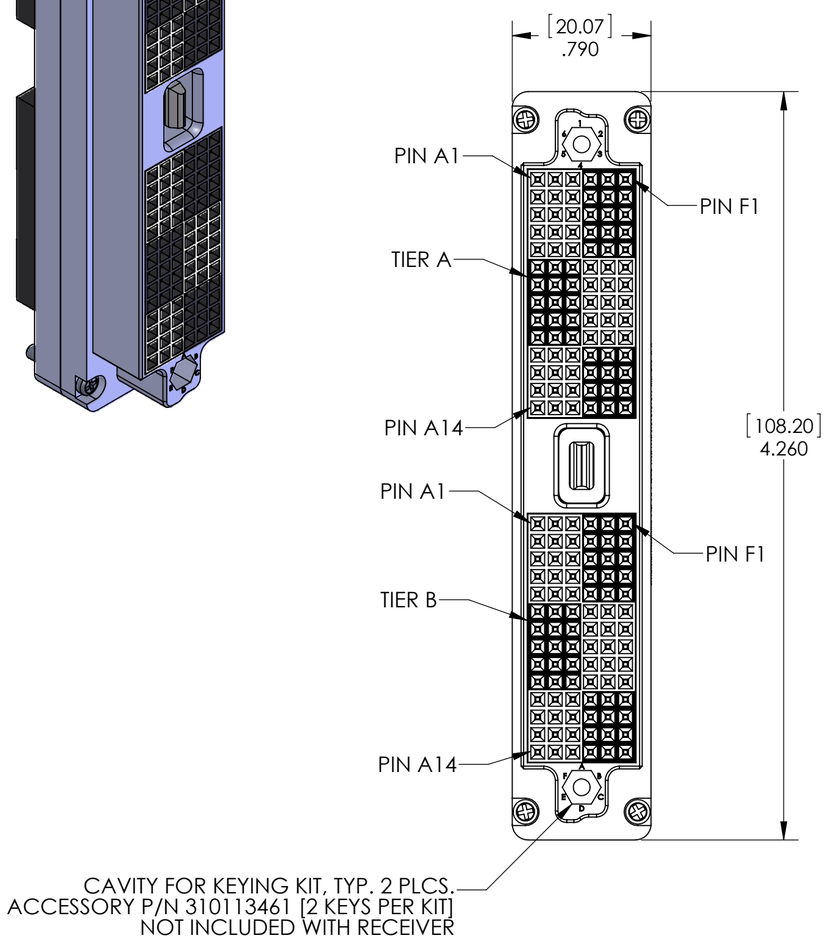

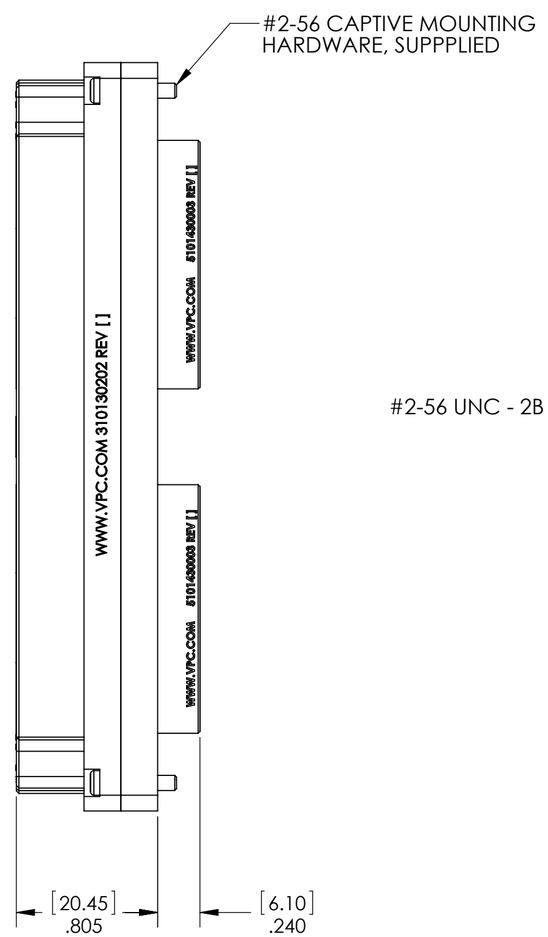

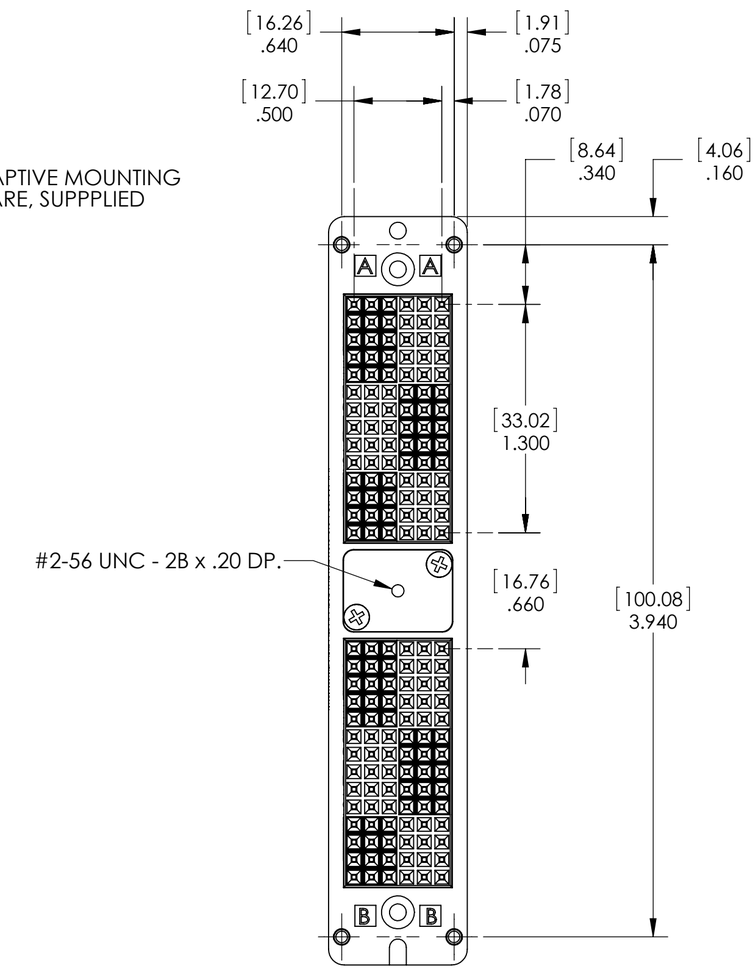

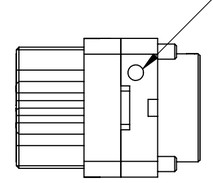

2. MATERIALS:
   MODULE: BLACK THERMO PLASTIC
   CONTACTS: Au PLATED COPPER ALLOY
   FRAME: Ni PLATED ZINC
   ALL HARDWARE: STAINLESS STEEL

1. FOR APPLICATION USE & CARE INFORMATION CONSULT VPC USERS GUIDE @WWW.VPC.COM

NOTES:

RELATIVE CONNECTOR POSITIONS AND WIRE ROUTING ARE GENERIC AND MAY VARY WITH PINOUT

DIMENSIONS ARE SHOWN AS: [MILLIMETERS] INCHES

CUSTOMER DRAWING

VIRGINIA PANEL CORPORATION
WWW.VPC.COM

i2 MX RCV ASSEMBLY
EMI W/ 2 QPDL DF INSERTS

SIZE	CAGE CODE	DWG.NO.	REV
C	18117	**310130202**	C

SCALE: 3:2 | 310130202 | 11/19/14 | SHEET 1 OF 2

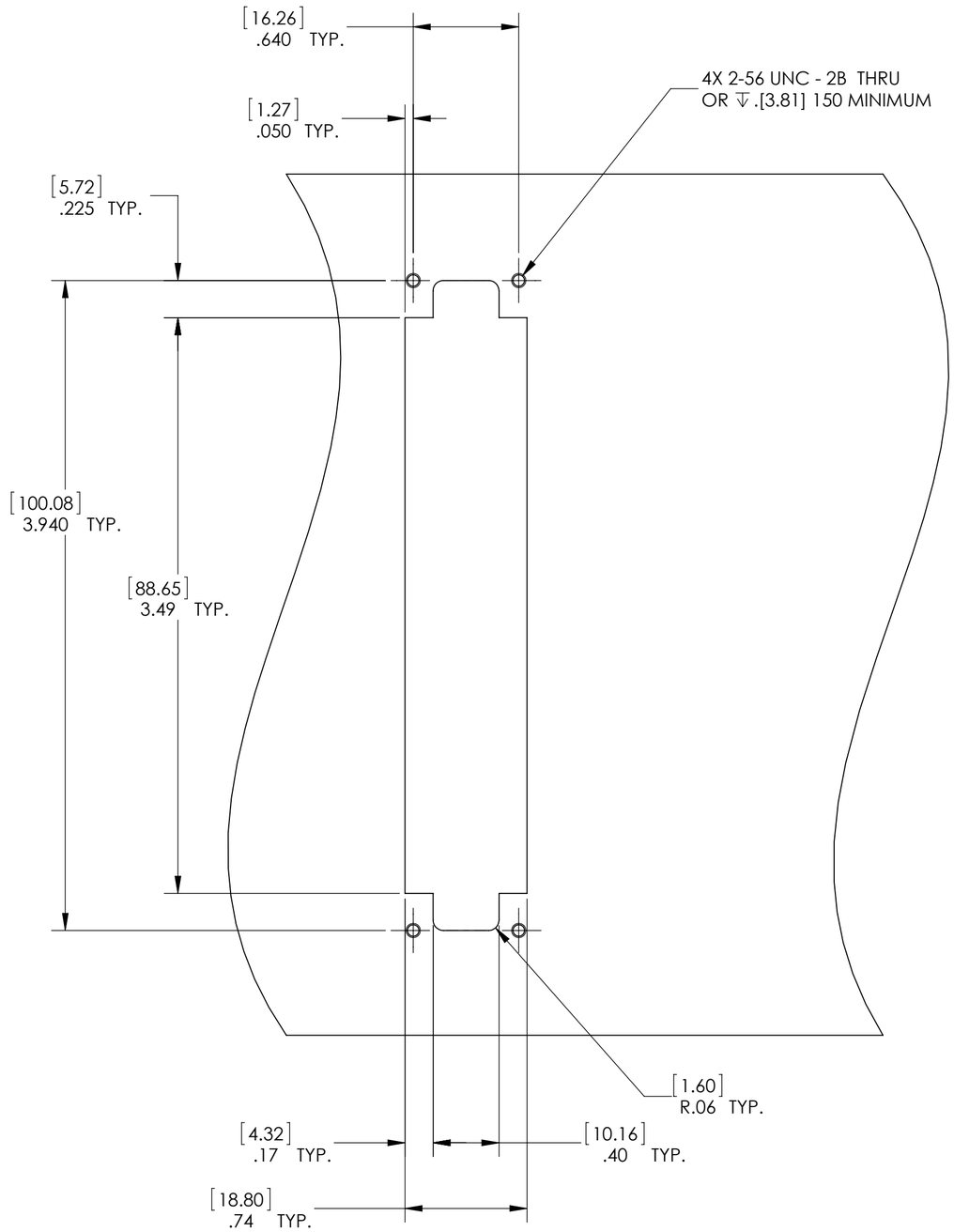

TOLERANCES ARE
.XX = ±[.25].01
.XXX = ±[.13].005
UNLESS OTHERWISE SPECIFIED

PANEL MOUNTING DETAIL

DO NOT SCALE DRAWING

CUSTOMER DRAWING - CUSTOMER DRAWING - CUSTOMER DRAWING

THE INFORMATION CONTAINED HEREIN IS THE EXCLUSIVE PROPERTY OF VIRGINIA PANEL CORPORATION AND IS SUBMITTED FOR USE BY THE CUSTOMER ONLY. THE DATA SHALL NOT BE DUPLICATED, USED, OR DISCLOSED IN WHOLE OR IN PART FOR ANY PURPOSE OTHER THAN TO MAINTAIN THE EQUIPMENT PROVIDED.

SIZE	CAGE CODE	DWG.NO.	REV
C	18117	**310130202**	C

SCALE: 3:2	310130202	11/19/14	SHEET 2 OF 2